EE 2101 - EXPERIMENT 9
CAPACITOR CURRENT-VOLTAGE RELATIONSHIP

INTRODUCTION

A capacitor is a linear circuit element whose voltage and current are related by a differential equation. For a capacitor, the relationship between current and voltage is [1]:

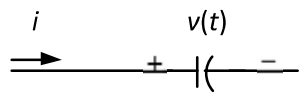

$$i(t) = C\frac{dv}{dt}$$

In order to experimentally determine the current, a series resistor, R, must be added to the circuit. Also, the function generator resistance, R_g (its Thévenin equivalent resistance), contributes additional resistance to the circuit. The entire resistance capacitance circuit is:

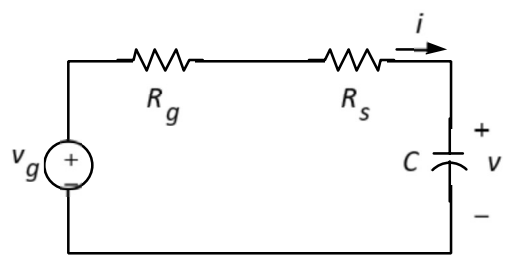

where v_g is the Thévenin equivalent voltage of the function generator. The first order differential equation relating the voltage across the capacitor, v, to the source voltage, v_g, is:

$$v_g = (R_g + R_s)i + v = Ri + v = RC\frac{dv}{dt} + v, since\ i = C\frac{dv}{dt}$$

where $R = R_g + R_s$. Thus,

$$\frac{dv}{dt} + \frac{v}{RC} = \frac{v_g}{RC}$$

The complete solution for v consists of two parts,

$$v = v_p + v_n$$

where v_n is the *natural response* (complementary response) and v_p is the *particular response*. The natural response, v_n, is the response that occurs when the forcing term, v_g, is zero,

$$\frac{dv_n}{dt} + \frac{v_n}{RC} = 0; \quad v_n = Ae^{-\frac{t}{RC}}$$

where A is an arbitrary constant of integration. The particular response depends on v_g.

In this experiment, we will consider v_g that is a square wave signal. Suppose v_g has been $-V_m$ for a long time and is suddenly switched from $-V_m$ to $+V_m$,

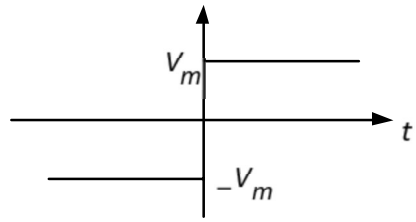

For convenience, assume the switching occurs at time, t, equal to zero. It can be shown that the particular response is,

$$v_p = V_m.$$

So, the complete solution for $t > 0$ is

$$v = Ae^{-\frac{t}{RC}} + V_m.$$

The constant, A, can be determined by considering what happens to the capacitor voltage, v, when v_g changes from $-V_m$ to $+V_m$. Just prior to the voltage change in v_g, $v(0^-) = -V_m$. Since the voltage across a capacitance cannot change instantaneously, this is also the voltage the instant after the change in v_g, $v(0^+) = -V_m$. So, $v(0) = -V_m = A + V_m$. And the complete solution is given by

$$v = -2V_m e^{-\frac{t}{RC}} + V_m.$$

The general shape of the response of the capacitor voltage is,

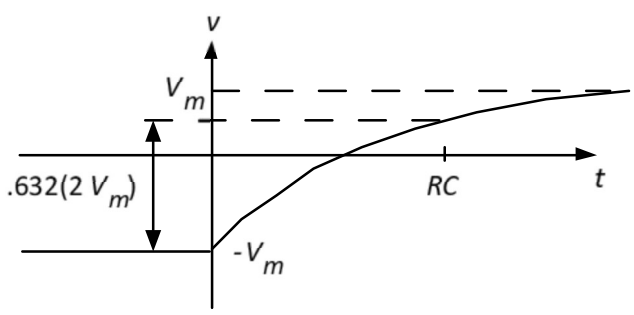

At the time equal to *RC* (which is called the *time constant*), the exponent has a value of -1. So, the value of the response at this point is,

$$v(t = RC) = -2V_m e^{-1} + V_m$$
$$= -2V_m(0.368) + V_m$$

$$= -2V_m(0.368) + V_m + V_m - V_m$$

$$= -V_m + 2V_m(1 - 0.368)$$

$$= -V_m + 2V_m(0.632)$$

Therefore, at a time equal to the time constant, *RC*, the capacitor voltage, *v*, has made 0.632, or 63.2% of the total change.

In this lab, we are interested in observing the voltage across the capacitor as well as the current following through it. We cannot measure current directly using the oscilloscope, hence we will indirectly measure current through the capacitor by measuring the voltage across the resistor in series with it. Since the resistor is in series with the capacitor, they share the same current. Therefore, according to Ohm's law:

$$i(t) = \frac{V_R}{R_s}$$

Therefore, to observe the current following through the capacitor, we measure the voltage V_R across the resistor R_s and divide it by the constant R_s to obtain the exact value. In this lab, we set R_s to 1 ohm so V_R measured is exactly *i.* We use a very small value of resistor so the voltage drop across the resistor is minimal, hence the nodal voltage at *a* is approximately equal to the voltage across the capacitor (as illustrated in step II).

NOTE: Read through the calculations section prior to beginning the experimental procedure, to gain a better understanding of what we are measuring in the lab.

Purpose

To demonstrate the relationship between the voltage and current of a capacitor.

Experimental Procedure

1. Connect the oscilloscope directly to the signal generator. Use DC coupling throughout this experiment. Set up the signal generator to produce a 1 kHz, 5 Vpp, square wave with 0 DC offset as measured on the oscilloscope.

2. Using an LCR meter, measure the actual values of the capacitance, *C*, and series resistance, *R,* then connect the circuit as shown. Display channels 1 at 2 V/div and channel 2 at 100mV/div. Use the math menu to display a third trace that is equal to channel 1 minus channel 2. You may wish to move traces 1 and 2 vertically so that they do not overlap.

You will observe that the node voltage measured on channel 1 is approximately equal to the difference between channel 1 and channel 2 (i.e. voltage across the capacitor), since the voltage drop across the resistor is minimal. Hence, we can confidently use channel 1 measurements as the capacitor voltage.

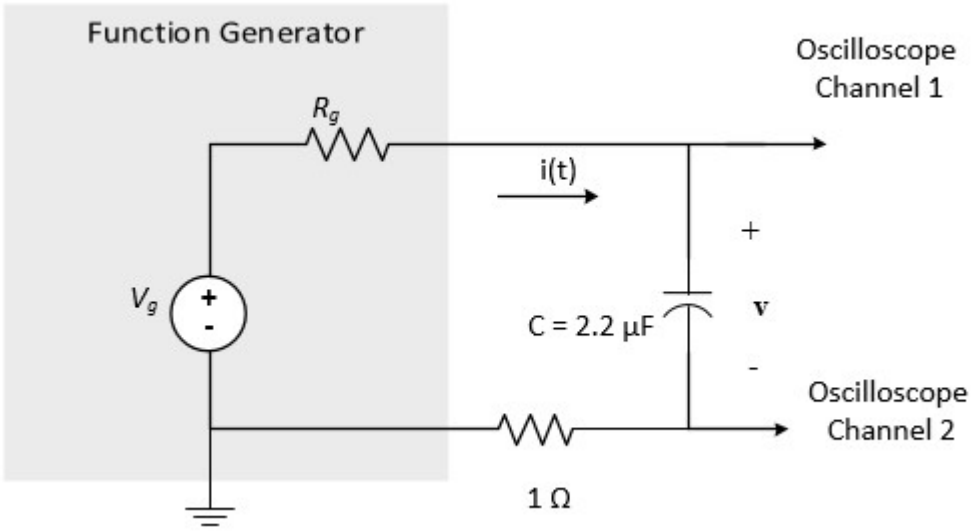

1. **Sine wave**: Turn off the math button. Set the time base to 200 μs/div. Change the signal generator to produce a sine wave but leave the amplitude, offset, frequency, etc. controls alone.

   a) Center both traces vertically so that the ground symbol for each trace lines up with the centerline on the oscilloscope. Temporarily turn off channel 2 and measure the Peak-peak, Average, and Period for the waveform on Channel 1. Use the quick measure menu to do this as this menu will cause the measurements to be displayed on the screen. Save this screen and include it in your report.

   b) Now turn off Channel 1 and turn on Channel 2. Measure the same three quantities for Channel 2, save the screen, and include it in your report.

   c) Finally display both channels simultaneously and use quick measure to determine the phase difference between channels 1 and 2. Save this screen and include it in your report.

   You will need some of these measured values and recorded traces for calculations described in the next section.

2. **Triangle wave**: Change the signal generator to produce a triangle wave and repeat all of the measurements you made in part 1. Save both screens (one screen for channel 1 and one screen for channel 2) including the displayed measurements of peak-peak, average and include them in your report. You do not need to save the screen for the phase measurement in the triangular waveform case.

   You will need some of these measured values and recorded traces for calculations described in the next section.

3. **Square wave**: Change the signal generator back to "square wave". Adjust the signal generator's amplitude so that the waveform across the capacitor (channel 1) is 10 Vpp with 0 DC offset. The waveform across the capacitor should look like a square wave with rounded corners. Notice how the rounded corners in channel 1 line up with the current spikes (corresponding to voltage spikes across the resistor) on channel 2.

a) Now turn off channel 2 so that you are only looking at the capacitor voltage waveform. Set the horizontal sweep, vertical amplification, and horizontal position to make the transition from -5 Volts to +5 volts (approximately) fill as much of the screen as possible.

b) Using the cursors, determine the time constant (as described in the theory section on page 3).

You will need this time constant to perform some of the calculations required in the next section.

4. Display channel 1 at 5 V/div and channel 2 at 100 mV/div with a horizontal setting of 100 μs/div. Turn off channel 1 and display channel 2 at the smallest number of volts/div and the smallest number of μs/division that will allow you to see both the positive and negative spikes filling up as much of the screen as possible. You may have to adjust the horizontal position to get both spikes displayed at the same time.

   Save this screen as you will need the waveform to perform calculations described in the next section.

Calculations

1. In part 1 of the experimental procedure, the voltage across the capacitor was a sinusoidal signal.

   a) Did the current of the capacitor (which is measured by voltage across resistor as discussed on page 3) lead or lag the voltage (that is, was the current waveform ahead of or behind the voltage waveform in time)?

   b) What is the phase difference (in degrees) between the voltage and the current?

   c) Using the actual capacitance value, calculate the (peak-to-peak) value of the current that would be expected for the observed voltage across the capacitor. Compare this value with the peak-to-peak current observed experimentally.

2. In part 2 of the experimental procedure, the voltage across the capacitor was a triangular waveform.

   a) Using the actual capacitance value, calculate the theoretical capacitor current corresponding to the positive and negative slopes of the triangular waveform.

   b) Do these currents agree with the values experimentally observed? If not, why not?

3. In part 3 of the experimental procedure, the signal generator produced a square wave voltage. However, because of the large currents that occur immediately after the voltage transition of the voltage generator, the voltage of the capacitor differed from a true square waveform. In the theory section of this experiment, it was shown that the voltage transitions for the capacitor were exponentially dependent on time.

   a) What was the effective time constant, *RC*, of the circuit?

   b) Using the time constant and the actual capacitance value, what was the overall resistance of the circuit?

c) Is this the value of resistance one would expect? Why?

4. In part 4 of the experimental procedure, the current pulse associated with the voltage transition for a v_g with a square waveform was observed and saved. The voltage across a capacitor depends on the charge, q, resting on the plates,

$$q = Cv.$$

If the voltage changes by a certain amount, Δv, the charge must also change accordingly,

$$\Delta q = C\Delta v.$$

The change in charge is equal to the integral of the current of the capacitor over the interval corresponding to the voltage change,

$$\Delta q = \int idt$$

For the square waveform voltage, the overall change was 10 volts. Therefore, the area under the current pulse should be $10C$, where C is the capacitance.

a) Using graphical integration, determine the area under the experimentally observed current pulse, in coulombs.

b) Compare the value calculated in (a) with the expected value, based on the actual capacitance and the actual voltage change. Explain any discrepancies.

References

1. D.R. Cunningham and J.A. Stuller, *Circuit Analysis*, 2nd ed., Houghton Mifflin, Boston, 1995, p. 40.